GalvinLab™- CP-BS Lab Set H&C Mixing Unit Type 13 Swivel J/V #16XT Tube Nozzle

Specification Data Sheet

AUSTRALIAN MADE AND OWNED

Features

- Tough vandal resistant handle that has a unique locking system
- Quality controlled. Every tap is tested
- Comprehensive range of interchangeable nozzles including vandal resistant aerators, tube nozzles, fixed spray nozzles and the AS2845.1 approved 'XT' tube nozzle
- Replaceable top assemblies are supplied for easy maintenance
- High quality chrome finish for easy cleaning and hygiene maintenance
- Australian Made; therefore, spare parts and support are available locally, reducing costs of down time on maintenance

To Specify

Australian Made AS/NZS 3718 approved, Galvin Specialised GalvinLab™ TL13 range of laboratory tapware is supplied standard with a fixed outlet, vandal resistant handle and button, 15mm male BSP inlet and standard jumper valve, all finished in bright chrome plate. Options including epoxy coating and ceramic discs.

Code:

TL13SJ16C – GalvinLab™ - CP-BS Lab Set H&C Mixing Unit Type 13 Swivel J/V #16XT Tube Nozzle

Certified System Environment ISO 14001 SAI GLOBAL

Certified System Quality ISO 9001 SAI GLOBAL

A family owned Australian business

galvinspecialised commercial taps + fixtures

© Galvin Engineering Pty Ltd: 2019

Performance Standards & Approvals

- AS/NZS 3718 – WaterMark
- WELS 4 Star Rating

WaterMark
AS/NZS 3718 Lic. WMKA0034
SAI Global

The more stars the more water efficient
WATER RATING
www.waterrating.gov.au
6.5 litres per minute
In accordance with AS/NZS 6400
Licence No. 0140
Galvin Engineering Pty Ltd

Typical Dimensions

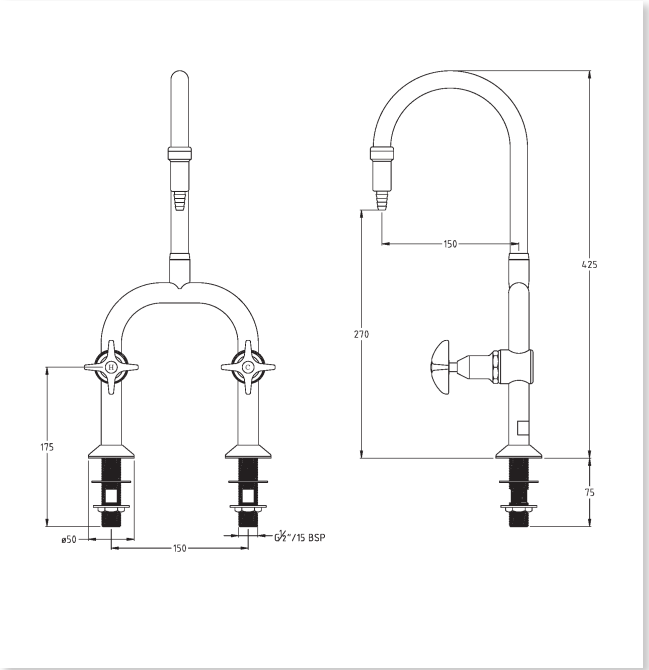

Technical Information

- Inlet: 1/2" BSP
- Outlet: Tube Nozzle
- Headwork: Jumper Valve
- Working Temperature Range (°C): 5 Min - 80 Max
- Working Pressure Range (kPa): 50 Min - 500 Max
- Nominal Flow Rate: 6.5
- Finish: Chrome

Maintenance & Cleaning

Galvin Specialised products should be cleaned with a soft damp cloth using only mild liquid detergent or soap and water. Do not use cleaning agents containing a corrosive acid, scouring agent or solvents. Do not use cream cleaners, as they are abrasive. Use of unsuitable cleaning agents may damage the surface. Any damage caused in this way will not be covered by warranty.

Regular maintenance should be carried out in accordance with the installation and troubleshooting guides provided with the product, relevant Australian Standards, local authorities and state codes.

As part of maintaining a safe and reliable plumbing system, we recommend tapware and valves are operated on at least a daily basis.

Warranty

Galvin Engineering products are covered under our Manufacturer's Warranty at www.galvinengineering.com.au. Galvin Engineering products must be installed in accordance with the installation instructions and in accordance with AS3500 and the PCA, relevant Australian Standards and local authorities applicable to product being installed. Water and electrical supply conditions must also comply to the applicable national and/or state standards, failing to comply with these provisions may void the product warranty and affect performance of the product.

Whilst all reasonable care has been taken in compiling the information in this document, the designs, dimensions and products shown are indicative only and should not be relied upon without our prior approval. Due to our policy of continuous development, we reserve the right to alter any details of specifications or products without notice. All information, drawings, technical specifications and product designs remains the property of Galvin Engineering Pty Ltd.

Within Australia: **1300 514 074** Outside Australia: P: +61 (0)8 9338 2344
F: +61 (0)8 9338 2340
sales@galvinengineering.com.au
www.galvinengineering.com.au
ABN: 78 008 719 382

A business unit of
GalvinEngineering
the mark of reliability

PERTH I SYDNEY I MELBOURNE I BRISBANE I ADELAIDE | UNITED STATES OF AMERICA | UNITED KINGDOM | NEW ZEALAND

© Galvin Engineering Pty Ltd 2019 (10/2020)